CITY OF COEUR D'ALENE

BUILDING DEPARTMENT

710 EAST MULLAN AVENUE
COEUR D'ALENE, IDAHO 83814 -3964
208-769-2267 – 208-769-2237 FAX

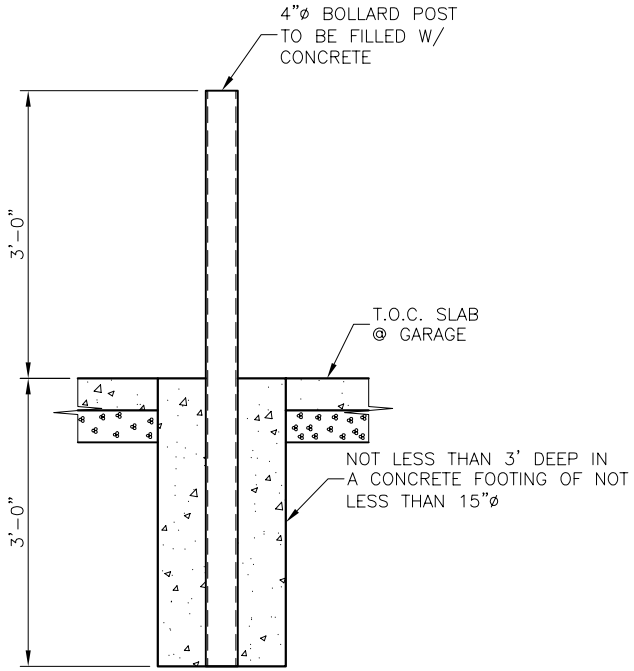

BOLLARD POST

TYPICAL

Bollard Post specifications found in International Fire Code
Section 312 Vehicle Impact Protection
312.2 Posts. *Guard posts shall comply with all of the following requirement:*
1. Constructed of steel not less than 4 inches (102 mm) in diameter and concrete filled.
2. Spaced not more than 4 feet (1219 mm) between posts on center.
3. Set not less than 3 feet (914 mm) deep in a concrete footing of not less than a 15-inch (381 mm) diameter.
4. Set with the top of the posts not less than 3 feet (914 mm) above ground.
~~*Located not less than 3 feet (914 mm) from the protected object.*~~ *[Excluded in garage inCoeur d'Alene].*

SCALE: 1/2"=1'
DRAWN BY: LPB
DATE: 9-12-06
SHEET 1 OF 1